LDP & LDP-X
End Suction Pumps

DP PUMPS
DRAKOS · POLEMIS

Fields of application

Water supply	Cooling water
Fire-fighting systems	Swimming pool water
Sprinkling	Sea water
Irrigation	Fire-fighting water
Drainage	Brackish water
Heating	Condensate
Air-con systems	Brine
Drinking water	Oils
Service water	Cleaning agents
Hot water	

Operating data

Q up to 2000 m³/h

H up to 100 m

Temperature -30 ˚C to +140 ˚C

Pressure up to 16 bar

Construction

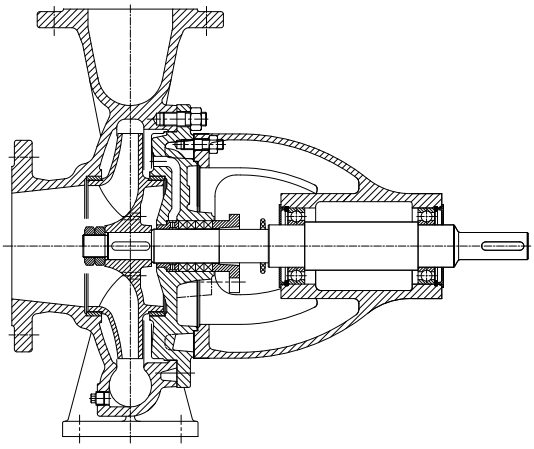

Type LDP

Pumps of the LDP, LDP-X series are horizontal volute casing centrifugal pumps. The principal dimensions and performance data of LDP type comply with DIN 24255. LDP-X type is outside of the official DIN-Norm. Dimensions can differ from other suppliers.

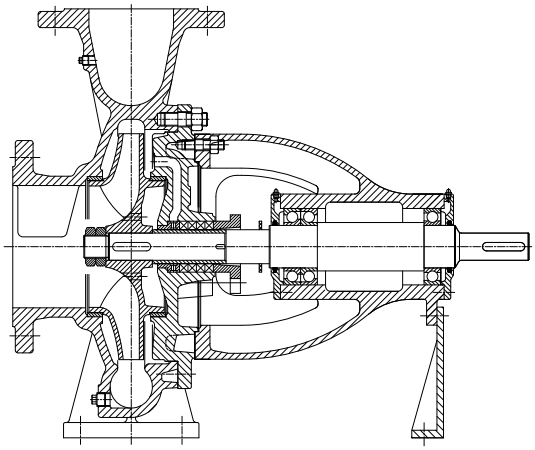

Type LDP-X

The components are factory-standardized. The major components of the horizontal LDP, LDP-X range are also used in the vertical configurations for dry or wet sump installations and to some extent for the vertical floor mounted and close coupled mono-bloc types DP-block.

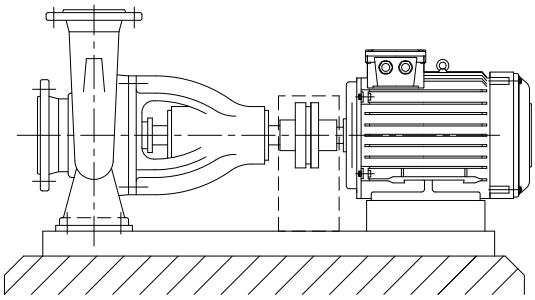

Standard horizontal installation

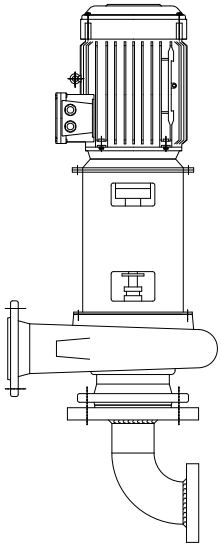

Direct vertical installation (VD)

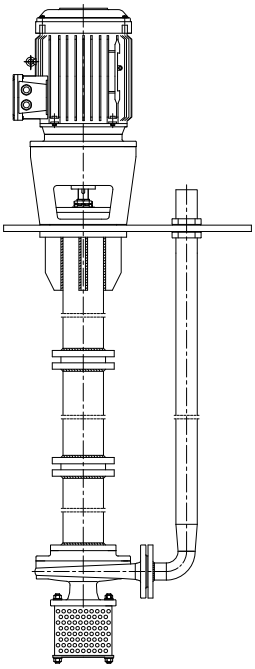

Vertical wet sump installation (VW)

LDP, LDP-X pumps are used primarily for handling clean or slightly abrasive media. The liquid should not contain any coarse or highly abrasive solids in order to prevent operational problems and premature wearwear, imposed by the operating conditions of the pump.

The suction and discharge flanges are according to DIN 2501 PN 10 or 16. All pumps are dynamically balanced according to ISO 1940 class G 6.3 and the pump axial thrust is hydraulically balanced.

Due to the pump design the complete bearing assembly including impeller and shaft seal can be dismantled without removing the volute casing from the pipe system (back-pull-out system).

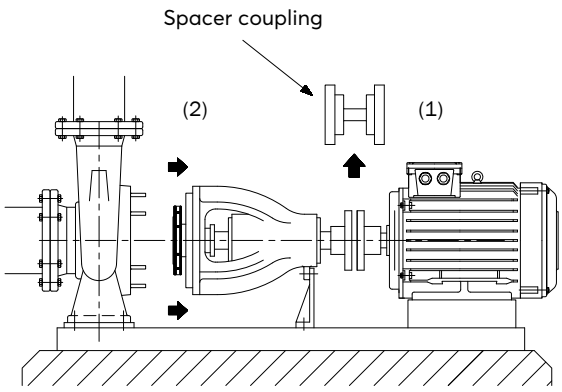

Casing and impeller can be fabricated from special materials, e. g. zinc-free bronze G-CuSn, SG iron GGG 40, or Stainless Steel 1.4408. With casing pressures of up to 16 bar, details on application.

Casing/Impeller

The pump casing is of the volute type fitted with a suction side wear ring. If required, e.g. as part of subsequent repair work, the gland/seal housing can easily be machined for a delivery side wearing ring, too.

All impellers are dynamically balanced and hydraulically relieved by means of compensating bores.

Shaft and bearings

Pump with overhung bearing housing to DIN 24255. Shaft rotates in grease lubricated anti friction bearings. Re-greasing by funnel-type grease nipple. If required, the bearing housing can be equipped with a support foot at the drive end. A bearing pedestal is available for heavy duty drive applications, e.g. V-belts.

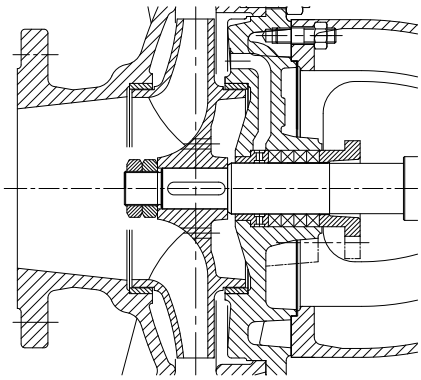

Stuffing box with gland packing

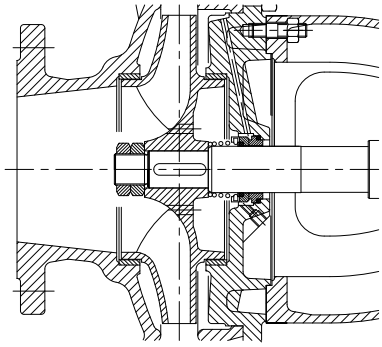

Stuffing box with mechanical seal

The standard arrangement is a packed gland for temperatures up to 110 ˚C.

For temperatures up to 140 ˚C a drip-tight maintenance free mechanical seal, according to DIN 24960 dimensions. Back-to-back double mechanical shaft seals, and "quench", are available for all variants on request.

An internal by-pass connects the pump casing with the stuffing box to ensure lubrication of the gland packing. When pumping from a vacuum tank or where the liquid to be pumped contains abrasive particles it is preferable to feed the stuffing box with an external sealing liquid. In this event the internal by-pass will be plugged.

Base frame

Pump and motor mounted on fabricated steel base frame which must be fixed with foundation bolts on a concrete base and subsequently grouted in. Base frames are constructed from welded profile sections.

Coupling

Two-component flexible coupling without spacer or Three-component flexible coupling with spacer. This coupling allows the removal of the pump rotor without the need for disconnecting the motor and pipe-work. If the pump housing, motor or the entire unit is moved, alignment is always necessary.

All couplings are supplied with a guard.

Motor

Pump direct driven by standard B3 foot mounted motor through flexible coupling.

Direction of rotation is clockwise looking at the pump shaft end. For maximum permissible speeds, depending on electric motors with 50 or 60 cycles supply, refer to page 4.

Mounting designation	B3 (IM 1001)
Enclosure class	IP 55
Insulation class	F
Ambient temperature	Max. 40˚C
Voltages	3 x 220-240/380-415 V

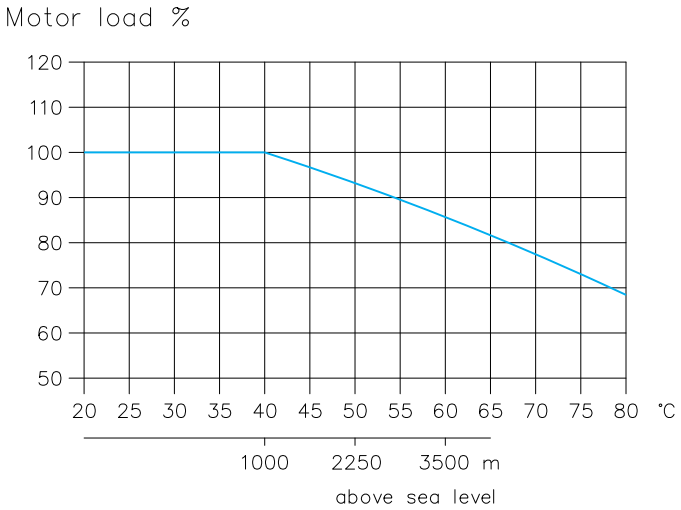

Selection of motors

The power required to achieve the requested duty point can be found by means of the power chart below the performance chart. Find the power curve corresponding to the required QH-value (or interpolate between curves).

When deciding the motor size a safety margin acc. ISO 5199 must be added.

Safety margins according to ISO 5199

Up to required pump shaft power: [kW]	Use motor output P_2 : [kW]	Up to required pump shaft power: [kW]	Use motor output P_2 : [kW]
322	355	15.9	18.5
286	315	12.8	15
227	250	9.1	11
181	200	6.1	7.5
145	160	4.3	5.5
120	132	3.2	4
100	110	2.3	3
81	90	1.7	2.2
68	75	1.1	1.5
49	55	0.81	1.1
40	45	0.55	0.75
32.5	37	0.40	0.55
26	30	0.27	0.37
19	22	0.18	0.25

Ambient temperature

Up to +40˚C.

Due to the low density and consequent low cooling effect of the air, operation at an ambient temperature above 40 ˚C or at an altitude exceeding 1000 m above sea level requires a reduction of the rated motor load.

Performance Curves

LDP - 1450 RPM

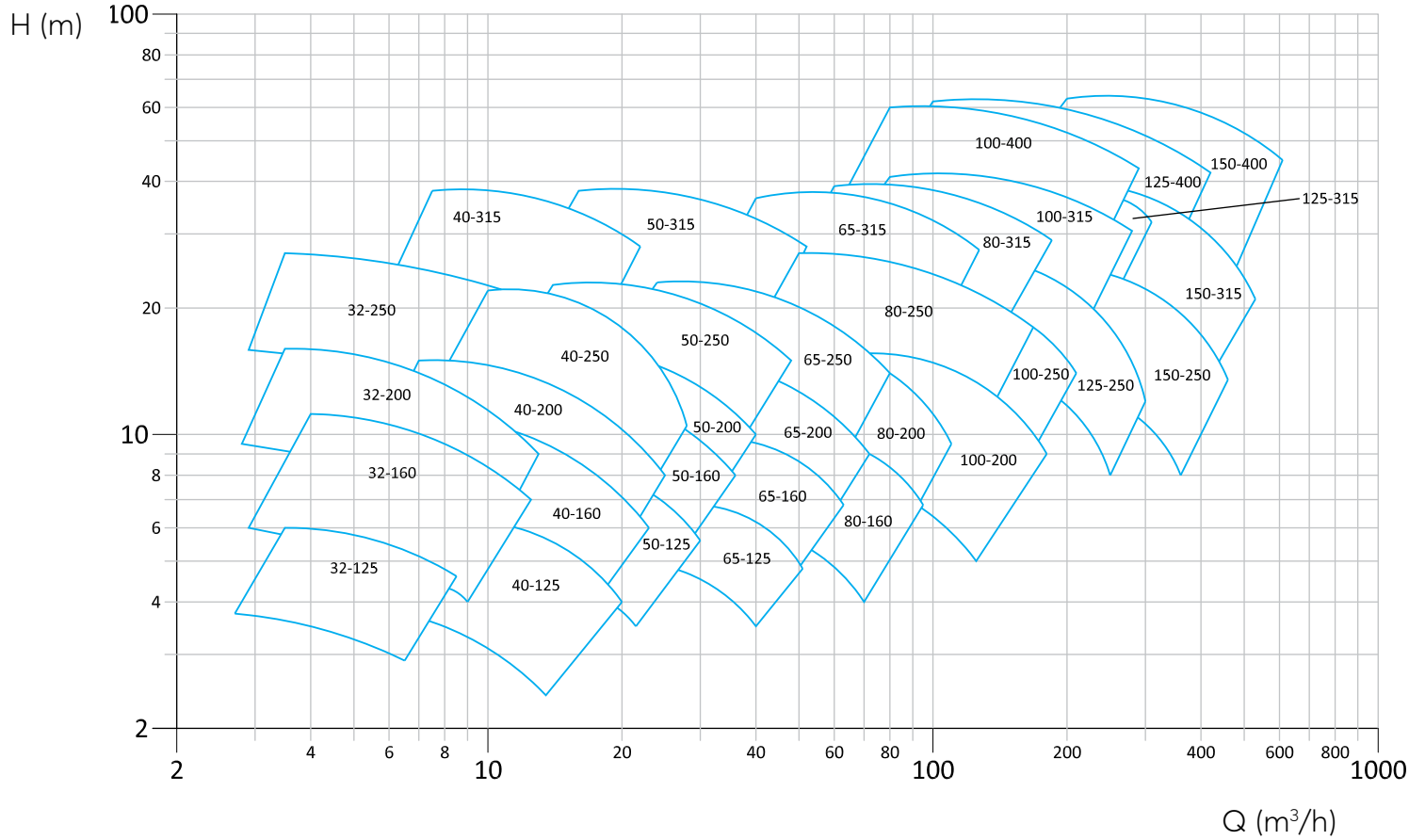

LDP - 2900 RPM

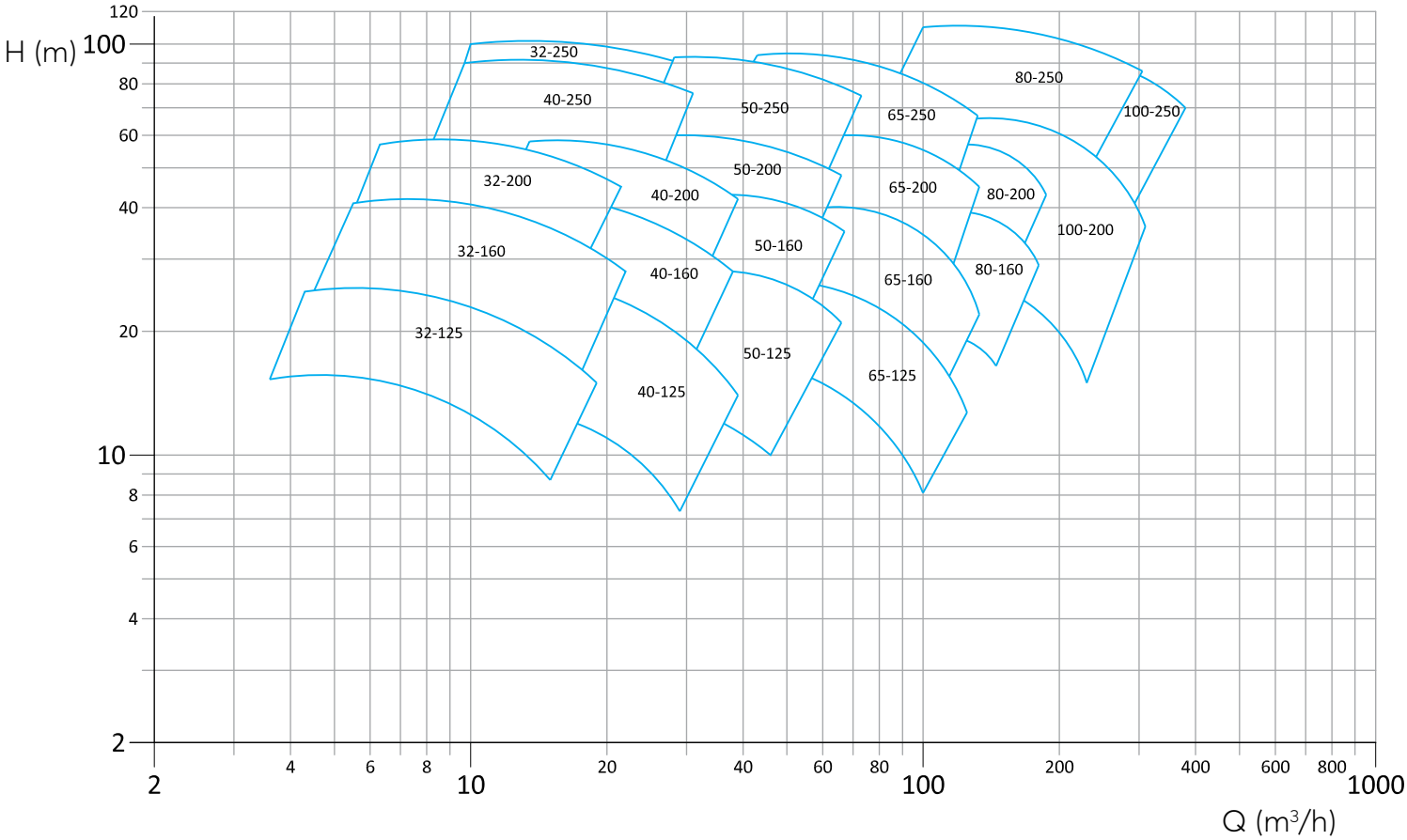

LDP-X - 1450 RPM

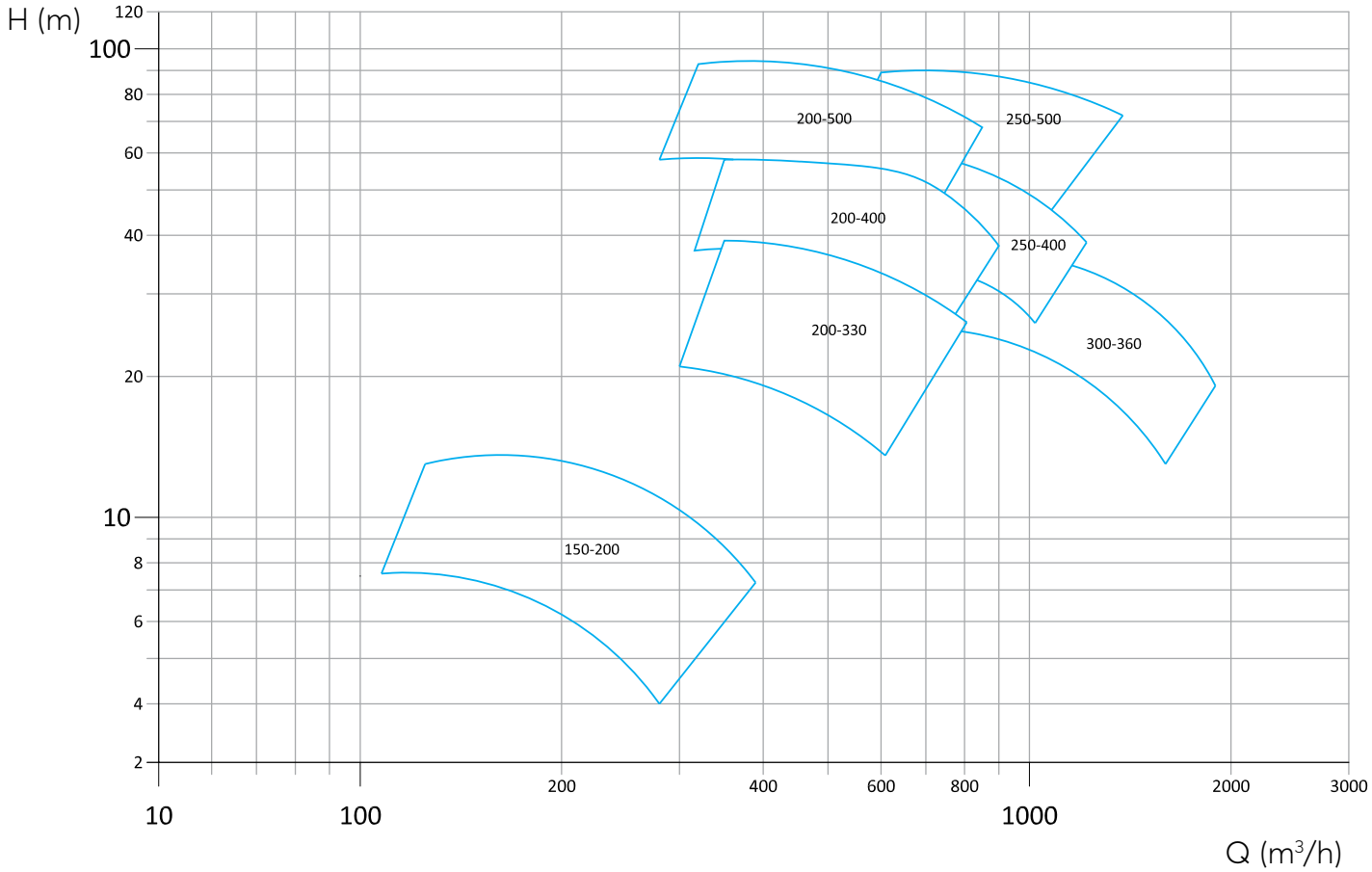

Range (Type LDP)

Pump type	Maximum permissible working pressure [1] Temp. -20 °C up to 110 °C Volute material		Temp. 110 °C up to 140 °C		Max. permissible pump speed [4]	Max. permissible power absorbed kW [2]			
	GG 25 cast iron bar	G-CuSn10 bronze bar	GG 25 cast iron bar	G-CuSn10 bronze bar	min⁻¹	1450 min⁻¹	1750 min⁻¹	2900 min⁻¹	3500 min⁻¹
32-125	10	8	8	6	3600	3,3	4	6,6	8
32-160	10	8	8	6	3600	3,3	4	6,6	8
32-200	10	8	8	6	3600	14,5	17,7	29	35
32-250	10	8	8	6	3600 [3]	14,5	17,7	29	35
40-125	10	8	8	6	3600	3,3	4	6,6	8
40-160	10	8	8	6	3600	14,5	17,7	29	35
40-200	10	8	8	6	3600	14,5	17,7	29	35
40-250	10	8	8	6	3600 [3]	14,5	17,7	29	35
40-315	10	8	8	6	1800	49	59,8		
50-125	10	8	8	6	3600	14,5	17,7	29	35
50-160	10	8	8	6	3600	14,5	17,7	29	35
50-200	10	8	8	6	3600	14,5	17,7	29	35
50-250	10	8	8	6	3600 [3]	14,5	17,7	29	35
50-315	10	8	8	6	1800	49	59,8		
65-125	10	8	8	6	3600	14,5	17,7	29	35
65-160	10	8	8	6	3600	14,5	17,7	29	35
65-200	10	8	8	6	3600	14,5	17,7	29	35
65-250	10	8	8	6	3600 [3]	49	59,8	98	118
65-315	10	8	8	6	1800	49	59,8		
80-160	10	8	8	6	3600	14,5	17,7	29	35
80-200	10	8	8	6	3600	49	59,8	98	119
80-250	10	8	8	6	3000	49	59,8	98	
80-315	10	8	8	6	1800	49	59,8		
100-200	10	8	8	6	3600	49	59,8	98	118
100-250	10	8	8	6	3000	49	59,8	98	
100-315	10	7	6	4	1800	49	59,8		
100-400	10	7	6	4	1800 [3]	120	146		
125-250	10	7	6	4	1800	49	59,8		
125-315	10	7	6	4	1800	120	146		
125-400	10	7	6	4	1800 [3]	120	146		
150-250	10	7	6	4	1800	49	59,8		
150-315	10	7	6	4	1800	120	146		
150-400	10	7	6	4	1800 [3]	120	146		

1) The maximum permissible working pressure includes the pressure at the suction branch (positive suction head) and the maximum generated head at zero flow (closed valve).

2) If pumps are driven by direct coupled diesel/petrol engines the permissible kW ratings must be reduced by 20%. This also applies to pumps filled with 1.4401 stainless steel shafts. If the power absorbed by the pump is already at or near the maximum figure then only a nominal motor kW margin is allowed.

3) Pump output / head at 60 Hz speeds must not exceed the maximum values shown on the corresponding 50 Hz curves.

4) Maximum speeds shown apply to pumps driven via a flexible coupling (direct from motor or stub shaft with plummer blocks). Applications involving overhung pulleys must be referred to our works specifying the proposed performance data.

Applications involving higher pressures and different casing materials must be referred to our works.

Range (Type LDP-X)

Pump type	Maximum permissible working pressure [1] Temp. -20 °C up to 110 °C Volute material		Temp. 110 °C up to 140 °C		Max. permissible pump speed [3]	Max. permissible power absorbed kW [2]			
	GG 25 cast iron	G-CuSn10 bronze	GG 25 cast iron	G-CuSn10 bronze		780	1170	1450	1770
	bar	bar	bar	bar	min^{-1}	min^{-1}	min^{-1}	min^{-1}	min^{-1}
150-200	10	7	6	4	2000			49	59,8
200-330	10	5	6	4	1800	81	96	120	146
200-400	10	5	6	4	1800	135	161	250	305
200-500	10	6	7	5	1500	135	161	250	
250-400	10	5	6	4	1800	135	161	250	305
250-500	10	6	7	5	1500	202	242	315	
300-360	6	4	4	3	1800	135	161	250	305

1) The maximum permissible working pressure includes the pressure at the suction branch (positive suction head) and the maximum generated head at zero flow (closed valve).

2) If pumps are driven by direct coupled diesel/petrol engines the permissible kW ratings must be reduced by 20%. This also applies to pumps equipped with 1.4401 stainless steel shafts. If the power absorbed by the pump is already at or near the maximum figure then only a nominal motor kW margin is allowed.

3) Maximum speeds shown apply to pumps driven via a flexible coupling (direct from motor or stub shaft with plummer blocks). Applications involving overhung pulleys must be referred to our works specifying the proposed performance data.

Applications involving higher pressures and different casing materials must be referred to our works.

Standardized versions of materials

	Category 0	Category 2	Category 3	Category 4	Category 5	Category 13
Volute casing	Cast Iron GG25	Cast Iron GG25	CuSn10	Cast Iron GG25	Cast Iron GG25	AISI-316
Discharge cover	Cast Iron GG25	Cast Iron GG25	CuSn10	Cast Iron GG25	Cast Iron GG25	AISI-316
Impeller	Cast Iron GG25	CuSn10	CuSn10	Bronze SAE 40	Cast Iron GG25	AISI-316
Wear rings	Cast Iron GG25	CuSn10	CuSn10	Cast Iron GG25	Cast Iron GG25	AISI-316
Shaft	Ck60	AISI-304	AISI-304	AISI-420	AISI-420	AISI-316
Shaft sleeve	Stainless Steel	Stainless Steel	Stainless Steel	Stainless Steel	Stainless Steel	Stainless Steel
Bearing bracket	Cast Iron GG25	Cast Iron GG25	Cast Iron GG25	Cast Iron GG25	Cast Iron GG25	Cast Iron GG25

Sectional drawings – part lists

Type LDP

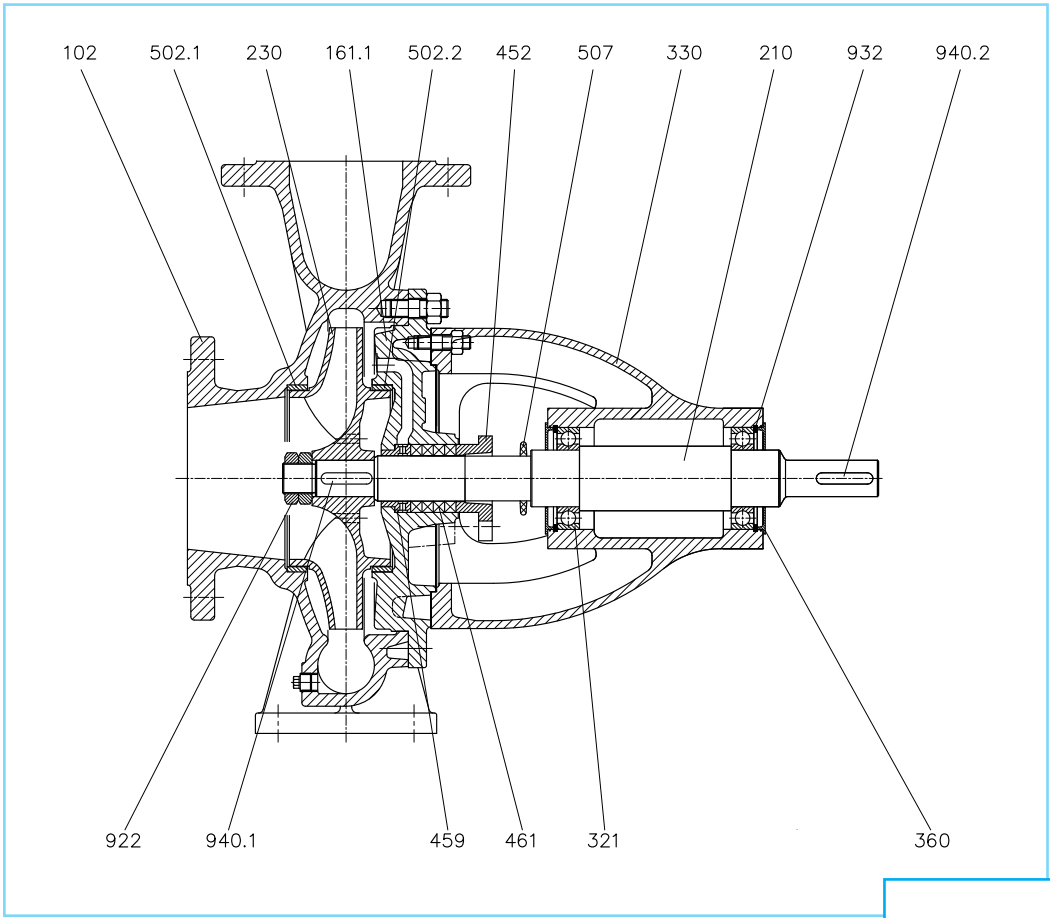

LDP type sectional view (gland packing)

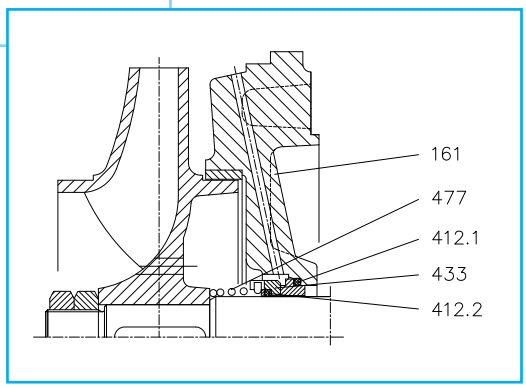

Detail for mechanical seal

Part number to VDMA	Part name	Part number to VDMA	Part name
102	Casing	452	Stuffing box gland
161	Casing cover	459	Stuffing box bushing
210	Shaft	461	Stuffing box packing
230	Impeller	477	Spring
321	Ball bearing	502	Wear ring
330	Bearing bracket	507	Deflector
360	Bearing cover	922	Impeller nut
412	Casing O-ring	932	Retaining ring for bores
433	Mechanical seal	940	Key

Type LDP-X

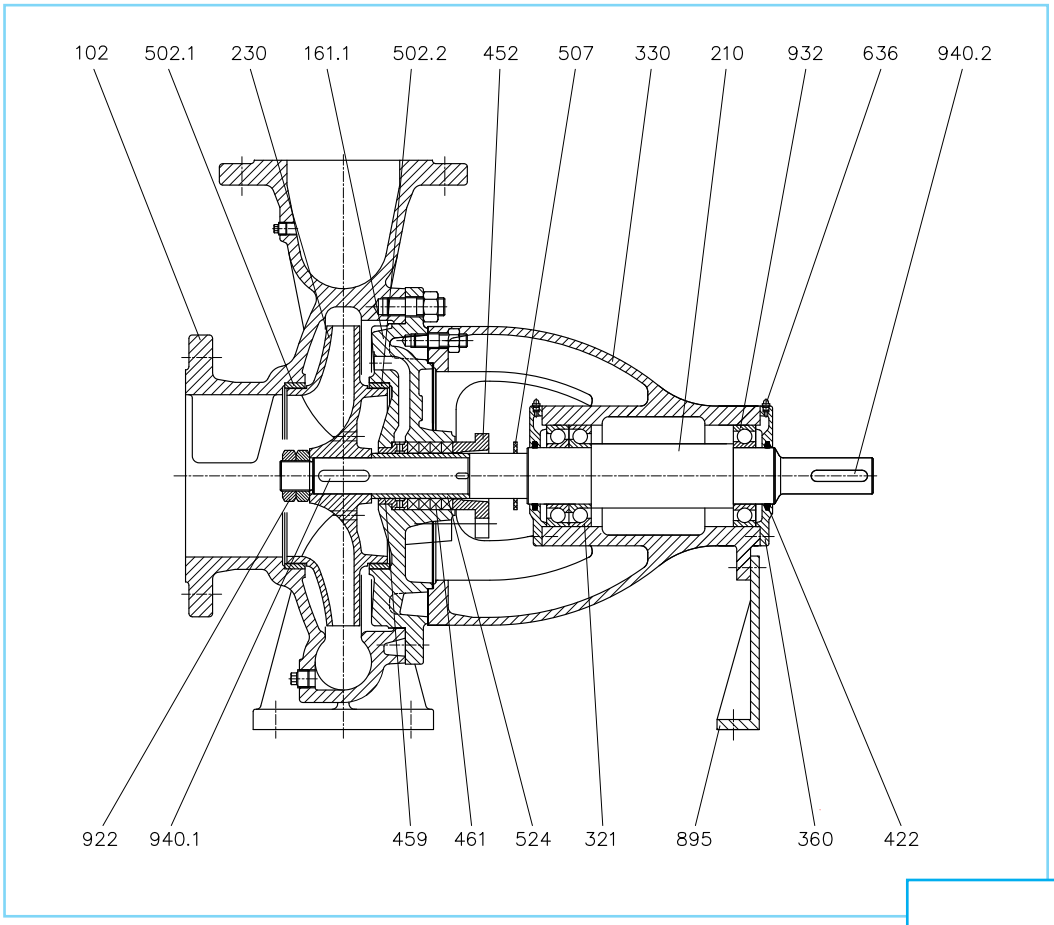

LDP-X type sectional view (gland packing)

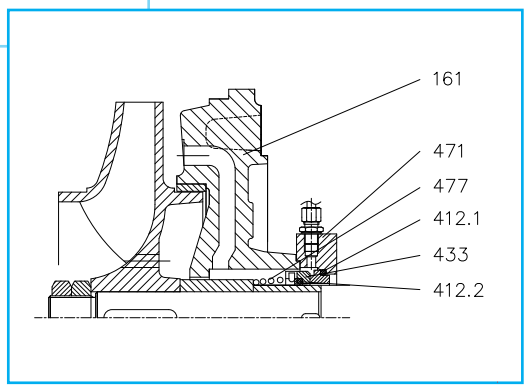

Detail for mechanical seal

Part number to VDMA	Part name	Part number to VDMA	Part name
102	Casing	461	Stuffing box packing
161	Casing cover	471	Seal cover
210	Shaft	477	Spring
230	Impeller	502	Wear ring
321	Ball bearing	507	Deflector
330	Bearing housing	524	Shaft sleeve
360	Bearing cover	636	Grease nipple
412	O-Ring	895	Supporting foot
422	Sealing ring	922	Impeller nut
433	Mechanical seal	932	Retaining ring for bores
452	Stuffing box gland	940	Key
459	Stuffing box bushing		

Bare shaft pump dimensions

Type LDP

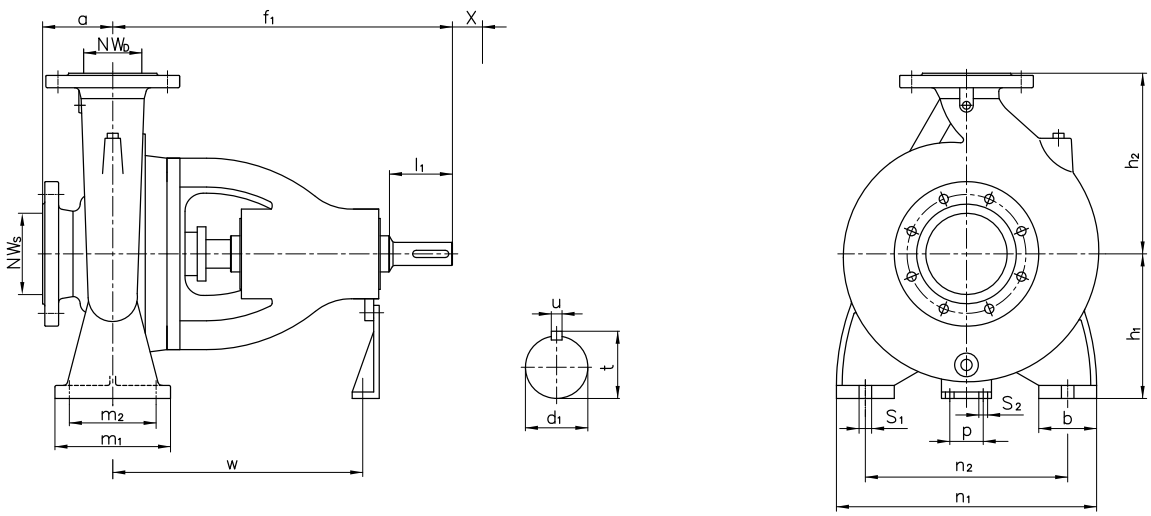

Pump size	Dimensions (mm)																			
	NW_S	NW_D	Length		Height		Feet & support mounting details									Shaft end				x*
			a	f_1	h_1	h_2	b	m_1	w	p	S_1	m_2	n_1	n_2	S_2	d_1	l_1	t	u	
32-125	50	32	80	360	112	140	50	100	260	110	M12	70	190	140	14	24	50	27	8	110
32-160					132	160							240	190						80
32-200					160	180														
32-250			100		180	225	65	125				95	320	250						100
40-125	65	40	80		112	140	50	100				70	210	160						110
40-160					132	160							240	190						85
40-200			100		160	180							265	212						
40-250					180	225	65	125				95	320	250						100
40-315			125	470	225	250			330				345	280		32	80	35	10	105
50-125		50	100	360	132	160	50	100	260			70	240	190		24	50	27	8	120
50-160					160	180							265	212						90
50-200						200														100
50-250					180	225	65	125				95	320	250						110
50-315			125	470	225	280			330				345	280		32	80	35	10	105
65-125	80	65	100	360	160	180			260				280	212		24	50	27	8	125
65-160						200														100
65-200					180	225							320	250						
65-250				470	200	250	80	160	330		M16	120	360	280		32	80	35	10	120
65-315	100		125		225	280							400	315						105
80-160		80		360	180	225	65	125	260		M12	95	320	250		24	50	27	8	
80-200				470		250			330				345	280		32	80	35	10	150
80-250	125				225	280	80	160			M16	120	400	315						125
80-315					250	315														130
100-200		100			200	280							360	280						155
100-250			140		225								400	315						140
100-315					250	315														
100-400				530	280		100	200	360		M20	150	500	400		42	110	45	12	155
125-250	150	125		470	250	355	80	160	330		M16	120	400	315		32	80	35	10	140
125-315				530	280		100	200	360		M20	150	500	400		42	110	45	12	150
125-400					315	400														160
150-250	200	150	160	470	280								550	450		32	80	35	10	140
150-315				530												42	110	45	12	160
150-400					315	450														165

* **x :** Back pull-out distance required between motor shaft end & pump shaft

Type LDP-X

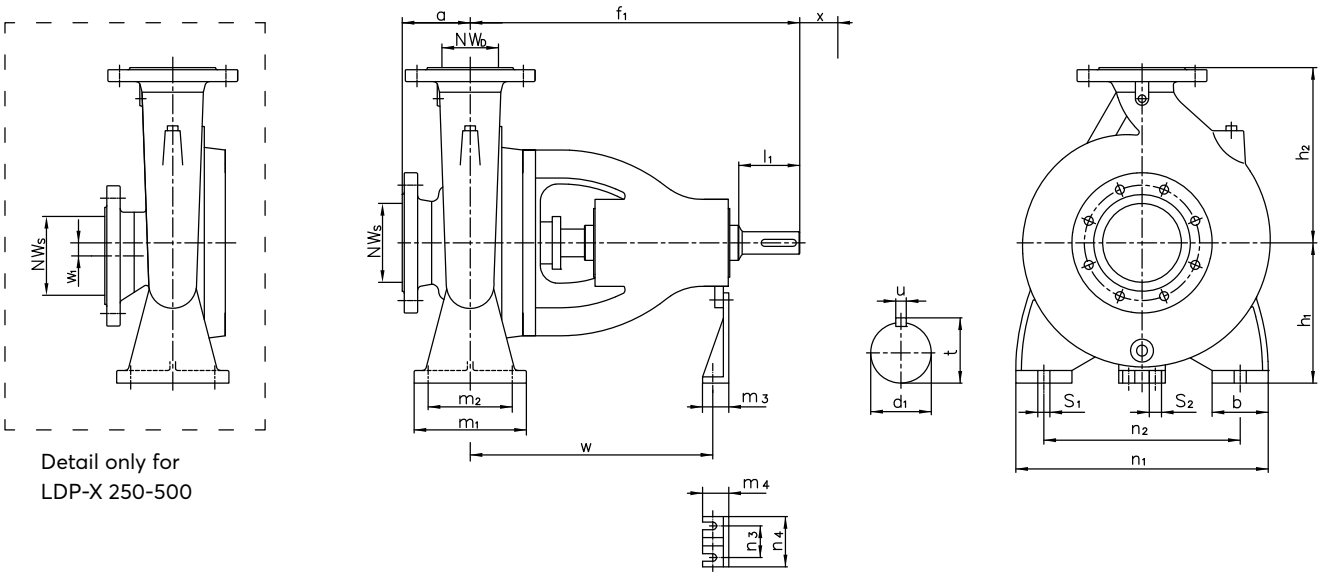

Detail only for
LDP-X 250-500

Pump size	Dimensions (mm)																				
		Length		Height			Feet & support mounting details												Shaft end		
	NW_S/ NW_D	a	f_1	h_1	h_2	w_1	b	m_1	m_2	m_3	m_4	n_1	n_2	n_3	n_4	w	S_1	S_2	d_1	l_1	x*
150-200	200/150	160	470	280	370	-	100	200	150	-	-	550	450	-	-	-	23	-	32	80	146
200-330	250/200	200	552	325	450	-	100	250	200	28	50			160	110	392		15	42	110	146
200-400			660	370	470	-	125			45	80	700	575			465			55		186
200-500			656	400	560	-	150					780	630			461					186
250-400	300/250	250	670	370	500	-	125					700	575			475					186
250-500		300	790	450	630	21	150	300	240			800	650			590	25		65	156	186
300-360	350/300	250	690	400	560	-			250			780	630			495	23		55	110	196

*** x :** Back pull-out distance required between motor shaft end & pump shaft

Unit dimensions

Type LDP-H

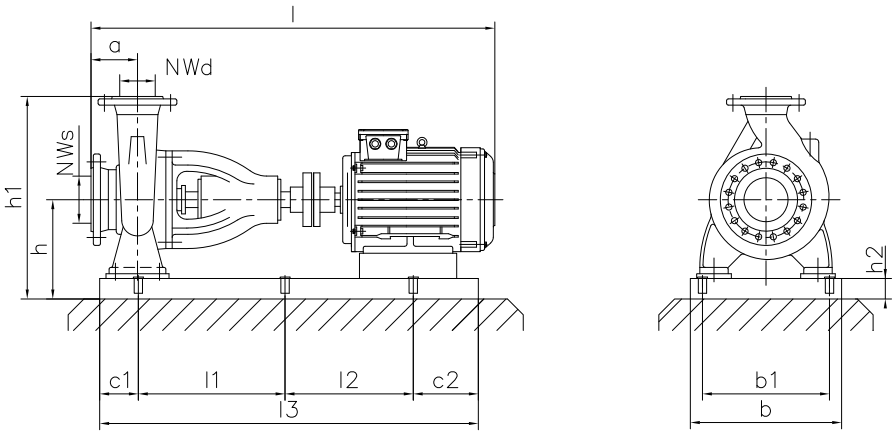

1450 RPM

Type	Motor		Suction/ Delivery		Unit Dimensions											
	kW	Frame	NW_s	NW_d	b	b_1	c_1	c_2	a	h	h_1	h_2	l	l_1	l_2	l_3
32-125	0.75	80	50	32	220	160	25	25	80	192	332	80	728	0	750	800
32-160	0.75	80	50	32	260	200				222	382	90			850	900
32-200	0.75	80	50	32						250	430					
32-250	1.1	90S	50	32	360	300			100		475	70	767			
	1.5	90L											793			
	2.2	100L											843			
40-125	0.75	80	65	40	220	160			80	192	332	80	728		750	800
40-160	0.75	80	65	40	260	200				222	382	90			850	900
	1.1	90S											747			
40-200	0.75	80	65	40					100	250	430		748			
	1.1	90S											767			
	1.5	90L											793			
40-250	1.5	90L	65	40	360	300					475	70				
	2.2	100L											843			
	3															
40-315	3	100L	65	40					125	295	545		978		950	1000
	4	112M								305	555		998			
	5.5	132S								295	545		1043			
50-125	0.75	80	65	50	260	200			100	222	382	90	748		850	900
	1.1	90S											767			
50-160	0.75	80	65	50						250	430		748			
	1.1	90S											767			
	1.5	90L											793			
50-200	1.5	90L	65	50												
	1.5	100L											843			
50-250	2.2	100L	65	50	360	300					475	70				
	3															
	4	112M											863		950	1000
50-315	5.5	132S	65	50					125	295	575		1043		1070	1120
	7.5	132M											1083			
65-125	0.75	80	80	65	300	240			100	260	460	100	748		850	900
	1.1	90S											767			
	1.5	90L											793			
65-160	1.1	90S	80	65									767			
	1.5	90L											793			
	2.2	100L								265	465		843			

1450 RPM

Type	Motor		Suction/ Delivery		Unit dimensions											
	kW	Frame	NW_s	NW_d	b	b_1	c_1	c_2	a	h	h_1	h_2	l	l_1	l_2	l_3
65-200	2.2	90L	80	65	360	300	25	25	100	250	475	70	843	0	850	900
	3	100L														
	4	112M											863		950	1000
65-250	4	112M	80	65						282	532		973			
	5.5	132S								280	530		1018			
65-315	5.5	132S	80	65	400	340			125	310	590	75	1043		1100	1150
	7.5	132M											1083			
	11	160M											1186			
80-160	1.5	90L	100	80	360	300				250	475	70	818		850	900
	2.2	100L											863			
	3															
80-200	3	100L	100	80							500		978		950	1000
	4	112M											998			
	5.5	132S											1043			
80-250	5.5	132S	100	80	400	340				285	565	75			1100	1150
	7.5	132M								292	572		1083			
	11	160M								275	555		1186			
80-315	7.5	132M	100	80						327	642		1083			
	11	160M								325	640		1186			
	15	160L								335	650		1226		1200	1250
	18.5	180M								325	640		1248			
100-200	3	100L	125	100	360	300				270	550	70	978		950	1000
	4	112M											998			
	5,5	132S								280	560		1043			
	7.5	132M								287	567		1083		1070	1120
100-250	7.5	132M	125	100	400	340			140	310	590	75	1098		1100	1150
	11	160M								325	605		1021			
	15	160L								310	590		1241			
100-315	15	160L	125	100						335	650				1200	1250
	18.5	180M								325			1263			
	22	180L											1298			
	30	200L								335			1358			
100-400	22	180L	125	100	550	510	35	215		395	750	100	1403		1050	1300
	30	200L						245					1443		1070	1350
	37	225S			640	590	110	220		400	755	120	1493		970	1300
125-250	11	160M	150	125	400	340	25	25		325	640	75	1201		1100	1150
	15	160L									690		1255		1200	1250
	18.5	180M									640		1263			
	22	180L											1298			
125-315	15	160L	150	125	550	510	35	195		395	750	100	1327		1020	
	18.5	180M						185					1363		1030	
	22	180L						215					1403		1050	1300
	30	200L						245					1443		1070	1350
125-400	30	200L	150	125		500				455	855	120				
	37	225S						255					1493		1110	1400
	45	225M						245					1518		1120	
	55	250M			650	600	110	280		435	835		1573		1020	1410
150-315	22	180L	200	150	600	560	35	215	160	395	795	100	1423		1050	1300
	30	200L						245					1463		1070	1350
	37	225S			660	610	115	200		400	800	120	1513		1015	1330
	45	225M					110	230					1538		985	1325
	55	250M					115	270					1593		1015	1400
150-400	55	250M	200	150	690	640	110	280		435	885				1020	1410
	75	280S			710	660	120	260		455	905		1663		1050	1430
	90	280M			840	780		310		515	965	180	1713		1120	1550

2900 RPM

Type	Motor		Suction/ Delivery		Unit dimensions											
	kW	Frame	NW_s	NW_d	b	b_1	c_1	c_2	a	h	h_1	h_2	l	l_1	l_2	l_3
32-125	0.75	80	50	32	220	160	25	25	80	192	332	80	728	0	750	800
	1.1															
	1.5	90S											747			
	2.2	90L											773			
32-160	1.5	90S	50	32	260	200				222	382	90	747		850	900
	2.2	90L											773			
	3	100L											823			
	4	112M											843			
32-200	3	100L	50	32						255	435		823			
	4	112M								252	432		843			
	5.5	132S			300	240				262	442	100	888			
	7.5															
32-250	7.5	132S	50	32	360	300			100	250	475	70	908			
	11	160M											1051		950	1000
	15															
40-125	1.1	80	65	40	220	160			80	192	332	80	728		750	800
	1.5	90S											747			
	2.2	90L											773			
	3	100L											823			
	4	112M			260	200				202	342	90	843		850	900
40-160	3	100L	65	40						222	382					
	4	112M														
	5.5	132S				240				232	392	100	888			
40-200	4	112M	65	40	300	200			100	252	432	90	863			
	5.5	132S								262	442	100	908			
	7.5					240										
	11	160M			360	300				230	410	70	1051		950	1000
40-250	5.5	132S	65	40						250	475		908		850	900
	7.5															
	11	160M											1051		990	1040
	15															
50-125	2.2	90L	65	50	260	200				222	382	90	753		850	900
	3	100L											843			
	4	112M											863			
	5.5	132S			300	240				232	392	100	908			
	7.5															
50-160	4	112M	65	50	260	200				252	432	90	863			
	5.5	132S			300	240				262	442	100	908			
	7.5															
	11	160M			360	300				230	410	70	1051		950	1000
50-200	7.5	132S	65	50	300	240				262	462	100	948		850	900
	11	160M								230	430	70	1051		950	1000
	15				360	300										
50-250	11	160M	65	50						250	475					
	15															
	18.5	160L											1094		1070	1120
	22	180M											1117			
65-125	4	112M	80	65	300	240				262	442	100	863		850	900
	5.5	132S											908			
	7.5															
	11	160M			360	300				230	410	70	1051		950	1000
65-160	7.5	132S	80	65	300	240				262	442	100	908		850	900
	11	160M			360	300				230	410	70	1051		950	1000
	15															
	18.5	160L											1094		1070	1120

2900 RPM

Type	Motor		Suction/ Delivery		Unit dimensions											
	kW	Frame	NW_s	NW_d	b	b_1	c_1	c_2	a	h	h_1	h_2	l	l_1	l_2	l_3
65-200	11	160M	80	65	360	300	25	25	100	250	475	70	1051	0	950	1000
	15															
	18.5	160L											1094		1070	1120
	22	180M											1151			
	30	200L			400	340					510		1211		1100	1150
65-250	15	160M	80	65	360	300				285	535		1161		1200	1250
	18.5	160L											1201			
	22	180M								280	530		1223			
	30	200L			400	340				285	535	75	1318			
	37															
	45	225M			580	530	130	260		345	595	120	1388		910	1300
80-160	11	160M	100	80	360	300	25	25	125	250	475	70	1086		950	1000
	15															
	18.5	160L											1126		1070	1120
	22	180M											1148			
80-200	15	160M	100	80							500		1186		1200	1250
	18.5	160L											1226			
	22	180M											1283			
	30	200L			400	340				285	565	75	1343			
	37				580	530				345	625		1413			
80-250	30	200L	125	80	400	340				285	565		1343			
	37				580	530	130	280		345	625		1413			
	45	225M										120			890	1300
	55	250M			630	580	100	245		370	650		1498		955	
	75	280S			710	660	35	250		415	695		1568		1135	1420
100-200	18.5	160L	125	100	360	300	25	25		285	565	70	1226		1200	1250
	22	180M								280	560		1273			
	30	200L			400	340				285	565	75	1343			
	37															
	45	225M			470	350				295	575	55	1393		1250	1300
	55	250M			520	400				320	600		1538		1380	1430
100-250	55	250M	125	100	620	570	100	250	140	408	688	140	1553		960	1310
	75	280S			680	630		260		436	716		1588		990	1350
	90	280M						285					1638		1015	1400
	110	315S				620		280		495	775	160	1673		1015	1400

Type LDP-X

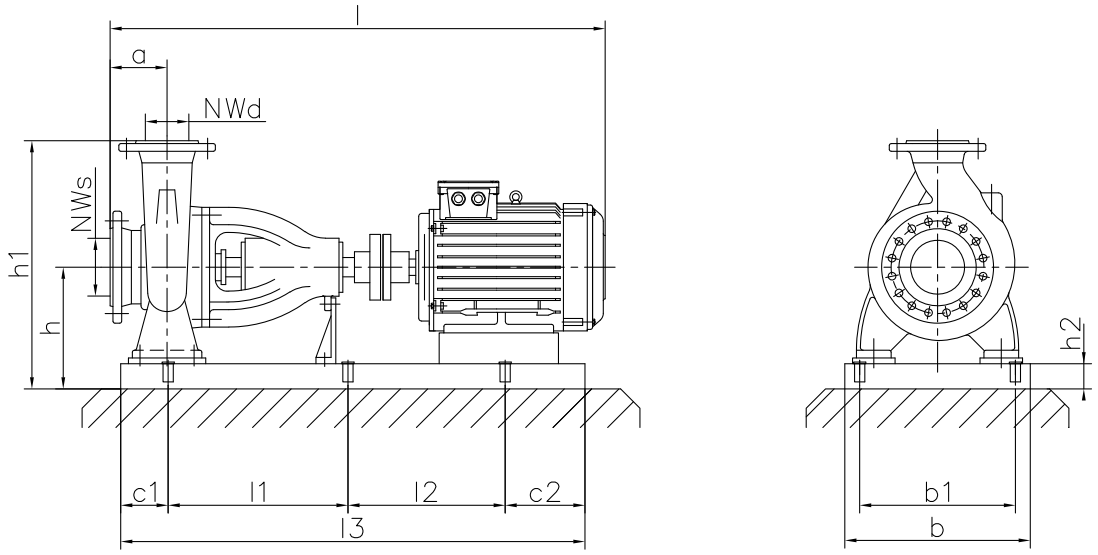

1450 RPM

Type	Motor		Suction/ Delivery		Unit dimensions											
	kW	Frame	NW_s	NW_d	b	b_1	c_1	c_2	a	h	h_1	h_2	l	l_1	l_2	l_3
150-200	5.5	132S	200	150	710	650	120	240	160	360	730	80	1124	0	740	1100
	7.5	132M						220					1154		760	
	11	160M						210					1244		820	1150
200-330	15	160L	250	200			150	250	200	405	855		1411		900	1300
	18.5	180M						225					1436		925	
	22	180L						270					1476		930	1350
	30	200L						300		425	875	100	1516		950	1400
	37	225S						250					1581		1000	
	45	225M						300					1606			1450
	55	250M						350					1681			1500
	75	280S						400		445	895	120	1726		1100	1650
	90	280M											1766			
200-400	30	200L	250	200	860	800		350		470	940	100	1624		1000	1500
	37	225S						240					1689		1110	
	45	225M						300					1714		1100	1550
	55	250M						350					1789		1100	1600
	75	280S								490	960	120	1834		1200	1700
	90	280M											1874			
	110	315S						400		510	980	140	2054			1750
	132	315M											2164		1300	1850
200-500	37	225S	250	200	940	880		250		500	1060	100	1685		1100	1500
	45	225M						300					1710			1550
	55	250M						350					1785			1600
	75	280S								520	1080	120	1830		1200	1700
	90	280M											1870			
	110	315S						400		540	1100	140	2050			1750
	132	315M						450					2160		1300	1900
	160	315L						400		560	1120	160	2160			1850
	250	355M						450		580	1140	180	2430	750	750	2100
	315	355L								600	1160	200				
250-400	37	225S	300	250	860	800		230	250	470	970	100	1749	0	1120	1500
	45	225M						300					1774		1100	1550
	55	250M											1849		1150	1600
	75	280S						350		490	990	120	1894		1200	1700
	90	280M						350					1934			
	110	315S						400		510	1010	140	2114			1750
	132	315M						450					2224		1300	1900
	250	355M						550		550	1050	180	2494	750	750	2200

1450 RPM

Type	Motor		Suction/ Delivery		Unit dimensions											
	kW	Frame	NW_s	NW_d	b	b_1	c_1	c_2	a	h	h_1	h_2	l	l_1	l_2	l_3
250-500	45	225M	300	250	960	900	170	280	300	550	1180	100	1944	0	1250	1700
	55	250M											2019		1300	1750
	75	280S						380		570	1200	120	2064			1850
	90	280M											2104			
	110	315S						330		590	1220	140	2284		1400	1900
	132	315M						430					2394	700	700	2000
	250	355M						580		630	1260	180	2664	750	750	2250
	315	355L						830		650	1280	200		650	650	2300
	400	400						630		670	1300	220	2975	900	900	2600
300-360	45	225M	350	300	940	880		280	250	500	1060	100	1794	0	1150	1600
	55	250M											1869		1200	1650
	75	280S						430		520	1080	120	1914			1800
	90	280M											1954			
	110	315S						330		540	1100	140	2134		1300	
	132	315M						430					2244	700	700	2000
	250	355M						530		580	1140	180	2514	750	750	2200
	315	355L								600	1160	200				
	400	400						630		620	1180	220	2825	850	850	2500

Realized by opk.gr

DP PUMPS

DRAKOS · POLEMIS

WATER BRINGS LIFE. WE BRING WATER.

ISO 9001
ISO 14001
OHSAS 18001
BUREAU VERITAS
Certification

MEMBER OF Europump

HEAD OFFICE
DRAKOS - POLEMIS SA
KOLOKOTRONI St 16, KRYONERI, ATTICA, GREECE
TEL.: +30 (210) 8161402, FAX: +30 (210) 8161262
info@dppumpsgroup.com
www.dppumps.global

CENTER OF RESEARCH & DEVELOPMENT
DPPUMPS USA LLC
167 W 81st St, Apt.4C, NEW YORK, USA
TEL.: +1 (347) 247-7214
usa@dppumpsgroup.com
www.dppumps.us